Ejercicio 2-6

jueves, 2 de abril de 2026 20:49

$(A+C+D)(A+C+D')(A+C'+D)(A+B')$

$AD + AC + AD' + AC + CC + CD' + AD + CD + \cancel{DD'}$

$(A + AC) + AD' + (AC + C) + CD' + AD + CD$ ✓

$A \quad C$

$A + C + A\bar{D} + AD + C\bar{D} + CD$

$A + C + A(\cancel{\bar{D}+D})^{1} + C(\cancel{\bar{D}+D})^{1}$

$A + C + A + C = A + C$

$(A+C)(A+C'+D)(A+B')$

$\cancel{AA}^{A} + AC' + AD + AC + \cancel{CC'}^{0} + CD$

$A + A\bar{C} + AD + AC + CD$

$A + A(\cancel{\bar{C}+C})^{1} + D(A+C)$

$(A + A) + DA + DC$

$A + AD + DC$ ABSORCIÓN

$(A + DC)(A+B')$

$\cancel{AA}^{A} + AB' + ADC + DCB'$

$(A + AB') + CD(A+B')$

$A + CD(A+B')$

$A + ACD + CD\bar{B}$

$A(\cancel{1+CD}) + CD\bar{B}$
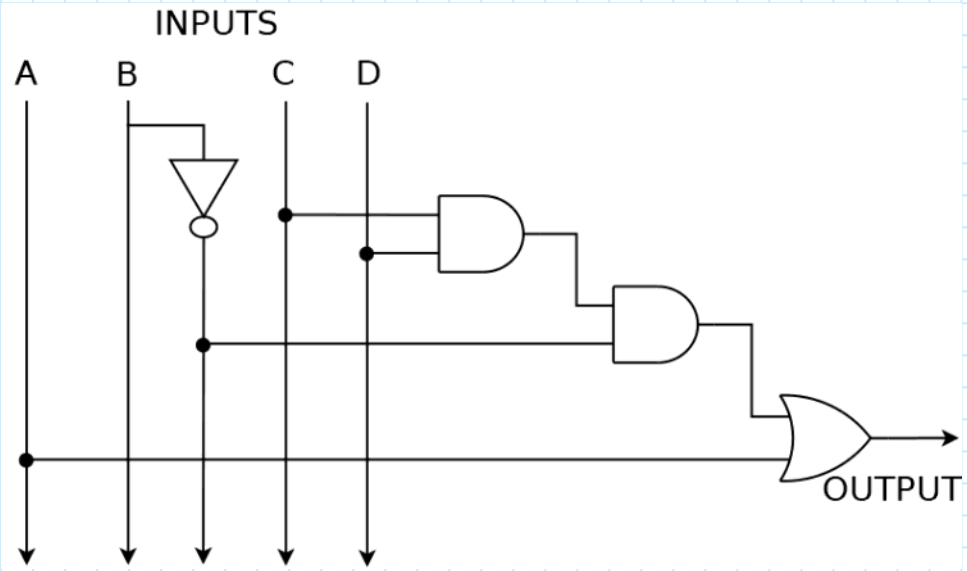
$\boxed{A + CD\bar{B}}$